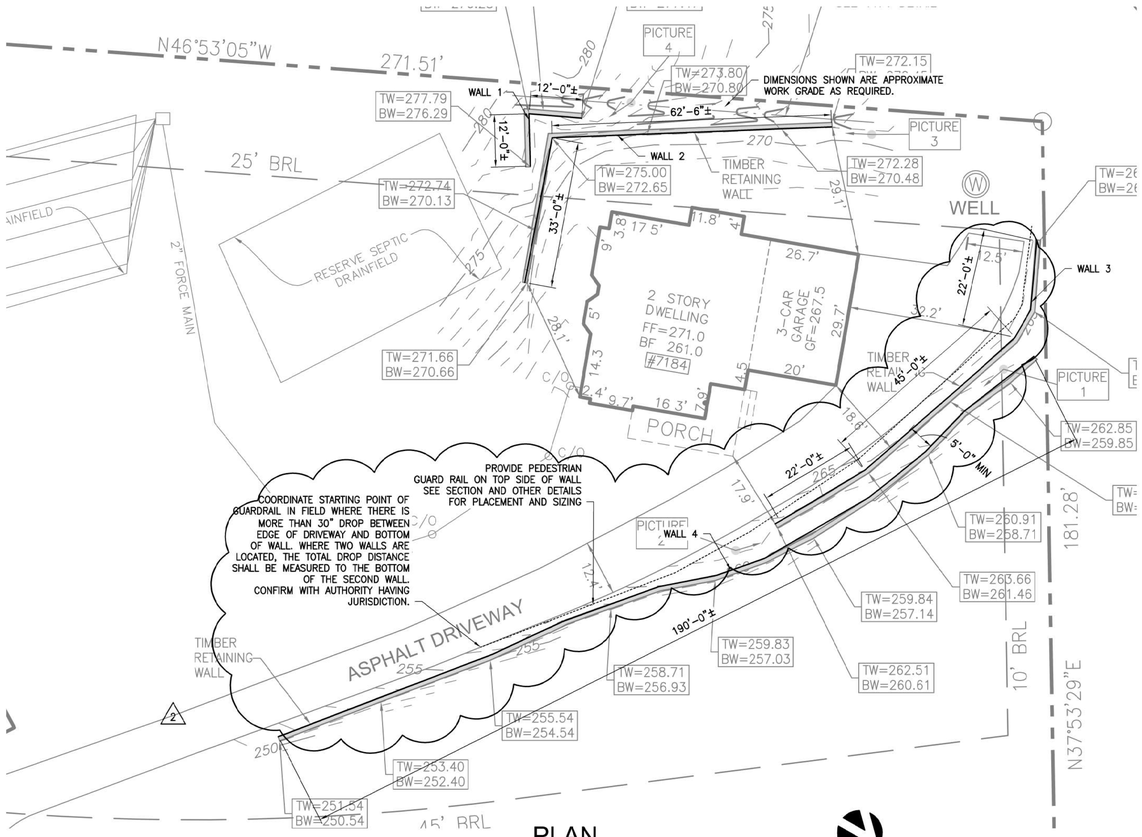

PLAN

SCALE: 1/16"=1'-0"

NORTH

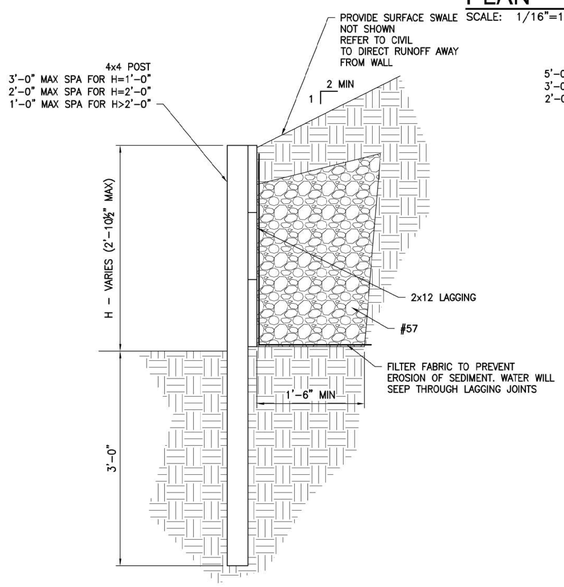

DETAIL - WALL 1 AND 2

SCALE: 1"=1'-0"

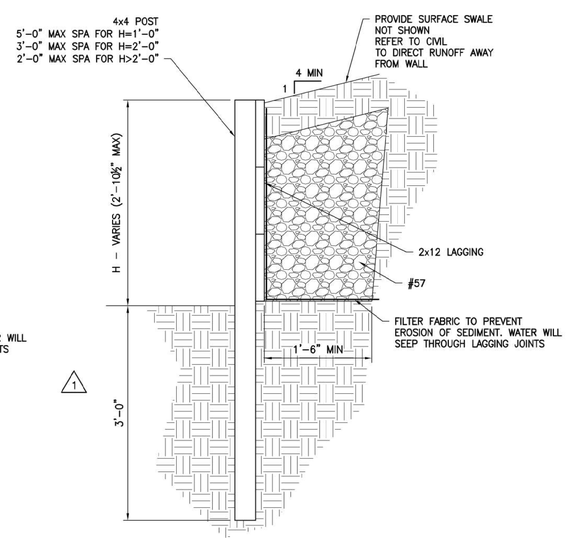

DETAIL - WALL 3 AND 4

SCALE: 1"=1'-0"

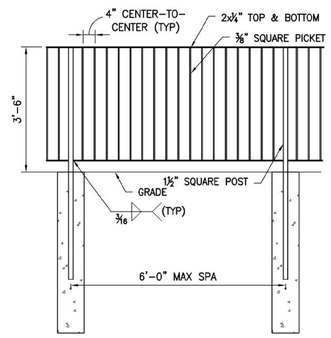

PEDESTRIAN GUARD ELEVATION

SCALE: 1/2"=1'-0"

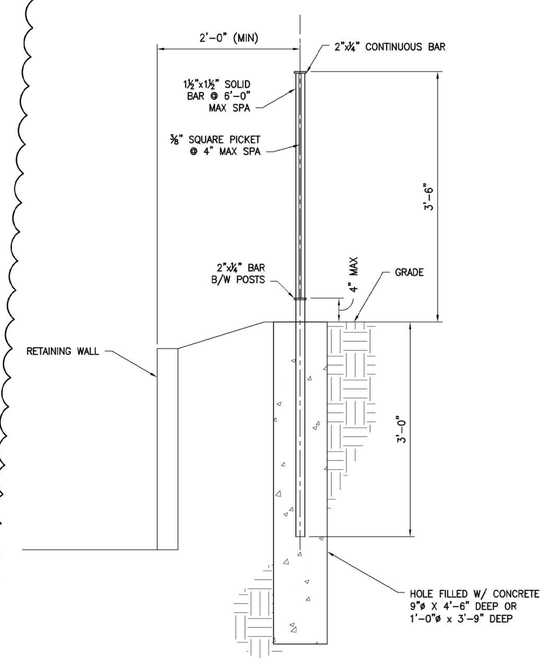

PEDESTRIAN GUARD RAIL - SECTION

SCALE: 1"=1'-0"

STRUCTURAL NOTES

1. **GENERAL REQUIREMENTS**
   1.1. THE STRUCTURE HAS BEEN DESIGNED TO RESIST DESIGN LOADS ONLY AS A COMPLETED STRUCTURE. APPLICATION OF CONSTRUCTION LOADS TO THE PARTIALLY COMPLETED STRUCTURE SHALL BE CONSIDERED BY THE CONTRACTOR AND INCLUDED IN THE DESIGN OF SHORING, BRACING, FORMWORK, AND OTHER SUPPORTING ELEMENTS PROVIDED FOR CONSTRUCTION OF THE STRUCTURE.

   1.2. CONTRACTOR SHALL CHECK AND VERIFY ALL DIMENSIONS, REPORTING ANY DISCREPANCIES TO THE ENGINEER BEFORE PROCEEDING WITH THE WORK.

2. **APPLICABLE CODES AND STANDARDS**
   2.1. "VIRGINIA RESIDENTIAL CONSTRUCTION CODE" (2015 INTERNATIONAL RESIDENTIAL CODE).
   2.2. ANSI/AWC NDS-2012 "NATIONAL DESIGN SPECIFICATION FOR WOOD CONSTRUCTION."

3. **DESIGN LOADS**
   3.1. LIVE LOAD
   SURCHARGE – RESIDENTIAL YARD & DRIVEWAY 40 PSF

4. **SOIL PARAMETERS**
   4.1. BACKFILL IS NO 57 STONE WITH AN APPROXIMATE UNIT WEIGHT OF 110 PCF AND A PHI OF 30°. BACFILL IS WRAPPED WITH FILTER FABRIC.
   4.2. IN SITU SOIL AT BOTTOM OF WALL IS ASSUMED TO HAVE AN ALLOWABLE BEARING PRESSURE OF 2,000 PSF AND A UNIT WEIGHT OF 110 PCF.

5. **MATERIALS**
   5.1. DIMENSIONED LUMBER #2 SPRUCE/PINE/FIR OR BETTER GRADE
   ALL LUMBER SHALL BE PRESERVATIVE TREATED FOR INGROUND USE **(AWPA USE CATEGORY UC4B OR BETTER)**

REVISIONS:
1 03/30/2021
2 06/09/2021

COMMONWEALTH OF VIRGINIA
JEREMY L. LUCAS
Lic. No. 44991
06/09/2021
PROFESSIONAL ENGINEER

MASTER ENGINEERS & DESIGNERS
904 Lakeside Drive, Lynchburg, VA 24501
434-846-1350 Fax: 434-846-1351

TIMBER RETAINING WALLS
7184 CLIFTON ROAD
CLIFTONG, VA

RETAINING WALL DETAILS

DATE ISSUED:	02/18/21
SCALE:	AS NOTED
JOB. NO.	482-2240
DESIGNED:	JLL
DRAWN:	JLL
CHECKED:	JLL
APPROVED:	JLL

DRAWING NO. S1
SHEET OF
REVISION 2